NO.	Qty	Sketch
A	2	
B	4	
C	16	6.3x40
D	4	
E	1	st4x40
F	1	
G	1	
H	1	
I	4	
J	1	

1

Ax2
Dx4

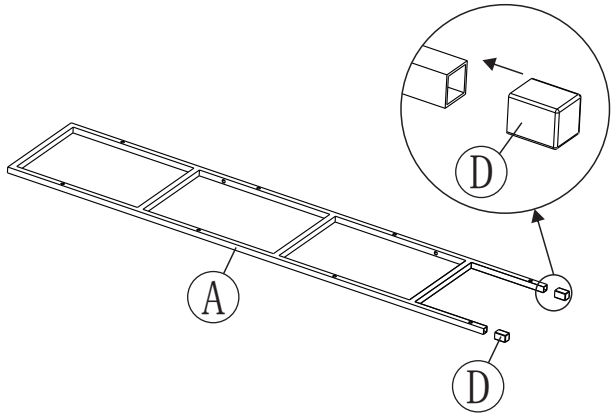

x2

2

Bx4
Cx16

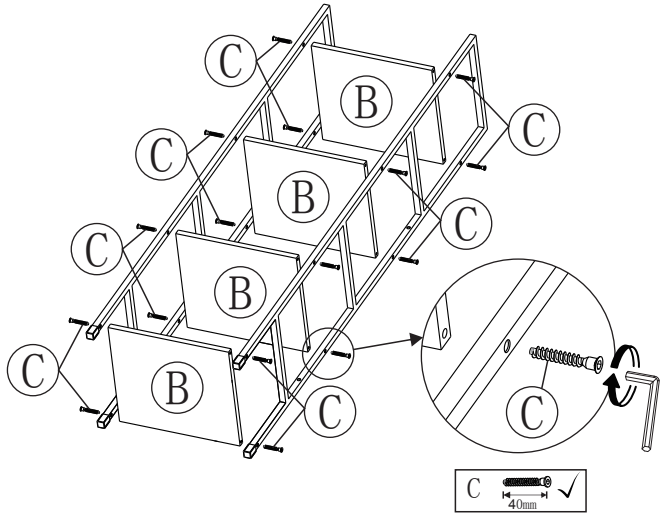

3

Ex1
Fx1
Gx1
Hx1

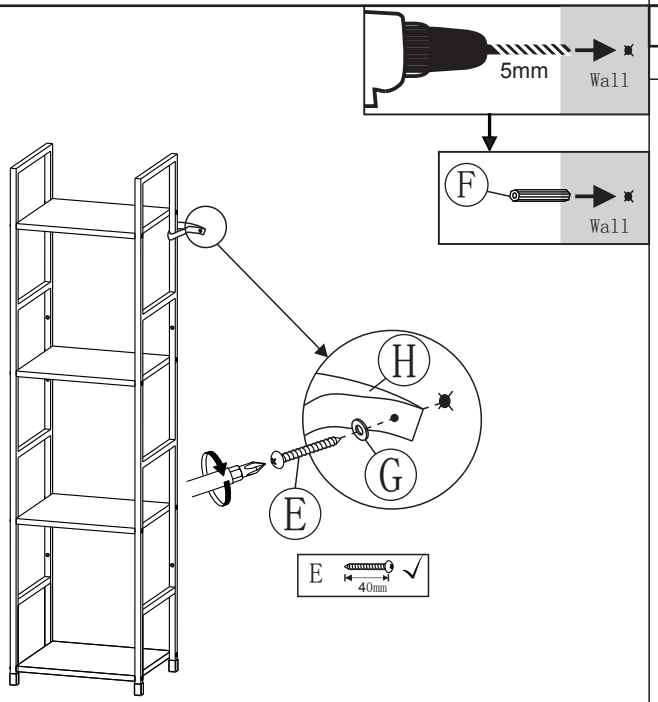

4

Ix4

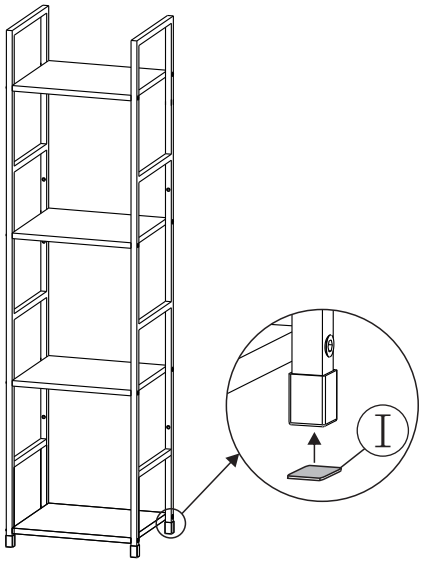

In case of unevenness,please use cloth stickers under plastic foot covers